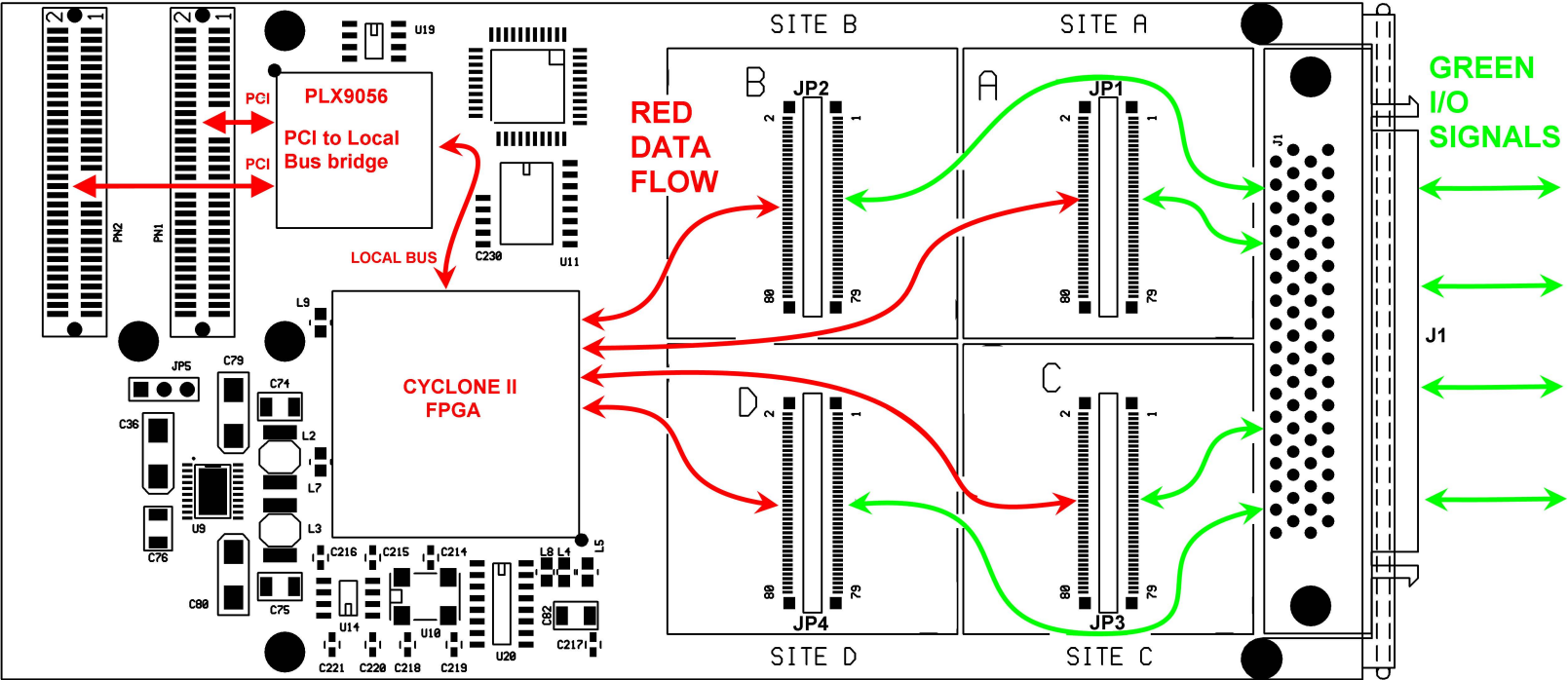
SITE B
SITE A
SITE D
SITE C
B
A
D
C
JP2
JP1
JP4
JP3
RED
DATA
FLOW
GREEN
I/O
SIGNALS
J1
PLX9056
PCI to Local
Bus bridge
PCI
PCI
LOCAL BUS
CYCLONE II
FPGA
U19
C230
U11
PN2
PN1
JP5
C79
C74
C36
L2
L7
U9
L3
C76
C80
C75
C216
C215
C214
L8
L4
L5
U14
U10
U20
C82
C217
C221
C220
C218
C219
L9